NOBLELIFT

2500 - 3000KG

FTH25/30N

COMPACT ALL-TERRAIN TELESCOPIC FORKLIFT, THERMAL

- High performance
- Compact design
- Best value for money
- Capacity 4500-6000kg
- Robust design

Why choose between price and quality when you can have both !

FTH25-30N - PRODUCT FEATURES

- With an all-terrain forklift platform, the FTH25-35N is equipped with
  a Korean LS EU V & EPA stage IV diesel engine, a 2WD & 4WD hydraulic transmission and a powertrain system that has been widely recognised in the market for over 10 years.
- Its reinforced chassis and HG70 steel arm ensure long life.
- A brand of quality hydraulic equipment and 24-degree cone hose fittings.
- The three-channel cooling system ensures a good thermal balance.

// Ergonomics

- Longer steering column, user-friendly interface and optimised operation.
- Two exterior mirrors and a large interior mirror improve visibility.
- An insulated cab that helps reduce vibrations and increases operator comfort
- Reclining front cab, fully enclosed, available as an option
- Suspension seat, self-locking handbrake

// Efficiency

- The telescopic forklift's main features are on a par with the leading European and American brands, to guarantee maximum working efficiency.
- The rear drive axle is designed with a large steering angle and small turning radius (3250mm), making it possible to work in tight spaces.
- High ground clearance means you can work on uneven terrain.

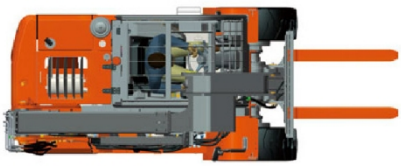

// Safety

- The excellent self-levelling system, which comes as standard, and the ±0.5° tilt angle of the forks, guarantee the safety of goods during transport.
- The FTH25-35N spill protection system improves operational safety
- Equipped with OPS as standard
- Proportional solenoid valves guarantee high precision and safety.
- The cylinder is equipped with a balancing valve that keeps the cargo on the forks in the event of a burst hydraulic hose.

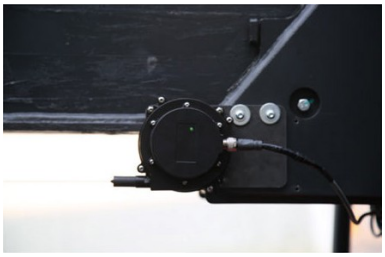

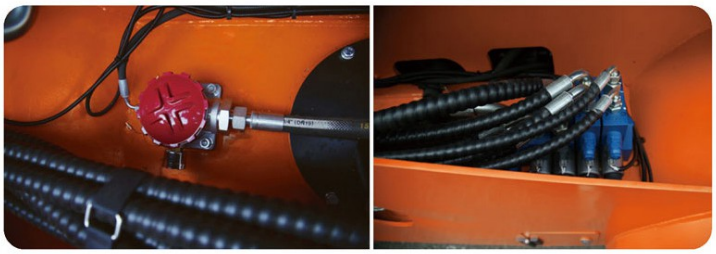

// Easy maintenance

- The telescopic mast system features an easy-to-maintain external traction tube.
- The engine bonnets have a wide opening angle and the cab is fully tiltable.

// Multi-function

4-in-1 bucket

Loading bucket

Right lifting arm

Forks

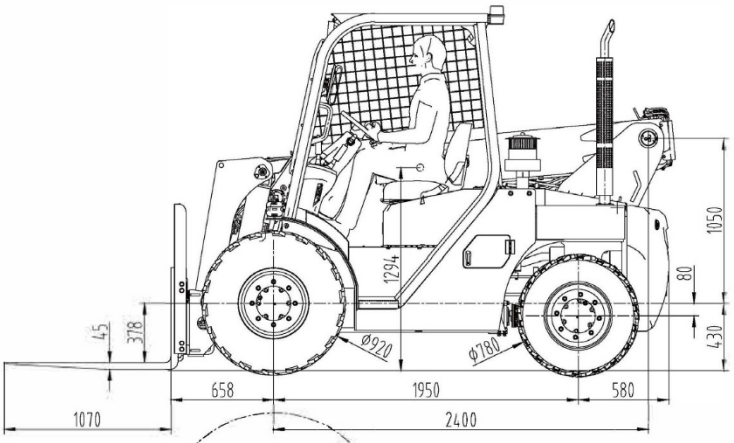

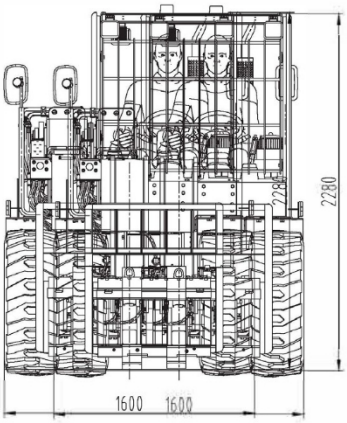

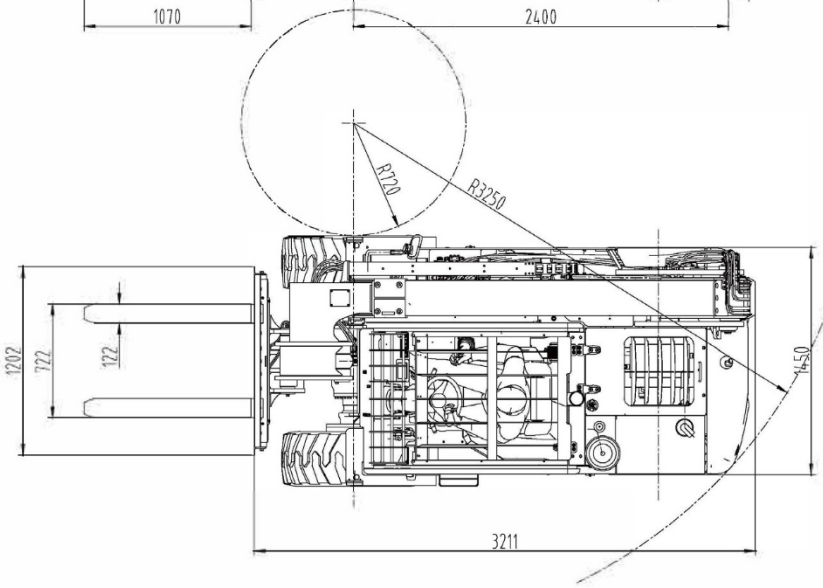

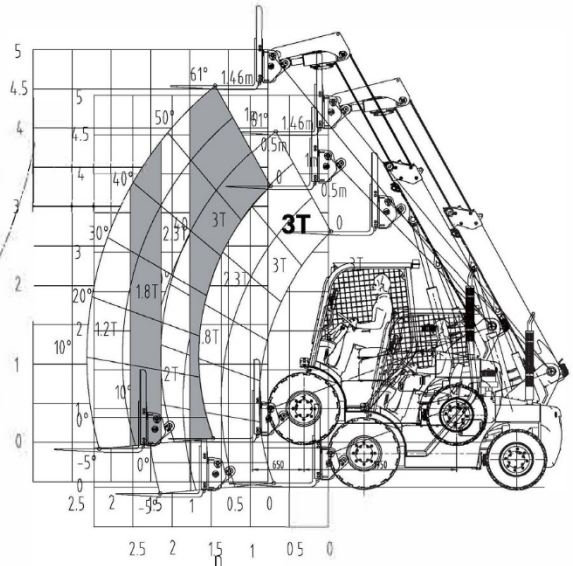

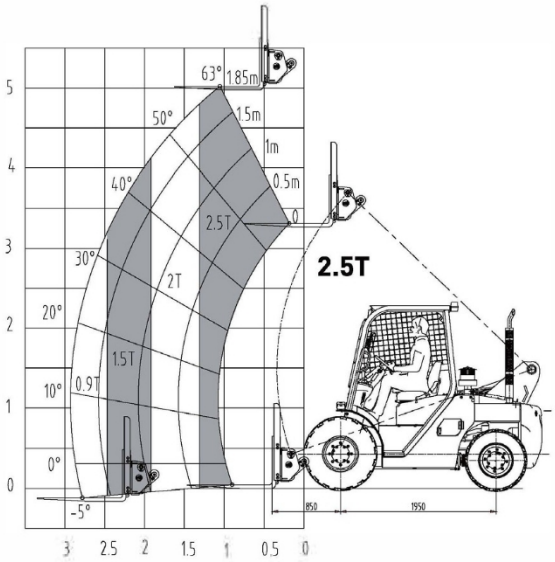

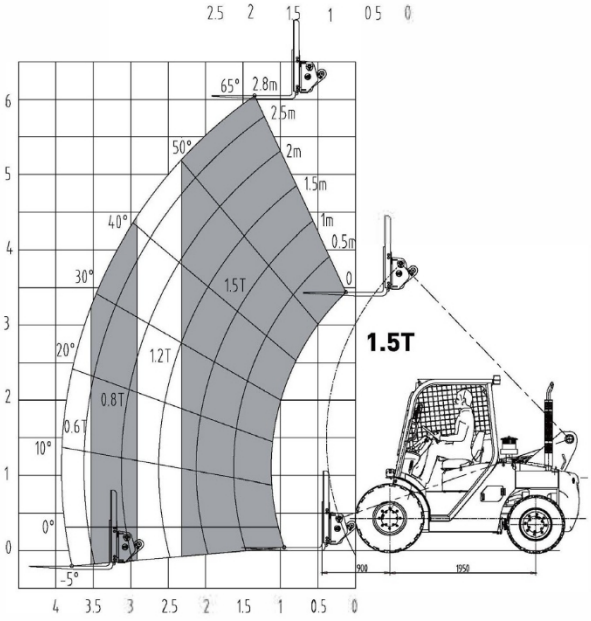

LS

Type : L3
Rated power: 42kw - 23OO rpm Engine torque:
2O8 kw - 17OON rpm Model: L4CRTV 4 (EUV)
No. of cylinders: 4
Bore x stroke: 88 x l03mm
Displacement: 2.505L

TECHNICAL DATA					
1.1	Model		FTH25N50LS	FTH30N45LS	FTH25N60LS
1.2	Max. load capacity	kg	2500	3000	2500
1.3	Load capacity at max. height	kg	900	1200	600
1.5	Max. forward reach	mm	5000	4500	6000
1.6	Centre of gravity	mm	500		
1.7	Outside diameter of front wheels	mm	920		
1.8	Levelling capacity (with load)	%	45		
1.9	Max. traction	KN	36		
1.10	Number of arm sections	n	2		3
1.11	Max. travel speed	km/h	18		
1.12	Optional equipment		Bucket		
1.13	Bucket dumping height	mm	3500	4100	
1.14	Front tyre range	mm	400	200	400
1.15	Total weight	kg	5500	5400	5600
DIMENSIONS					
2.1	Total length (with fork)	mm	3550	3300	3550
2.2	Total width	mm	1600		
2.3	Total height	mm	2280		
2.4	Wheelbase	mm	1950		
2.5	Ground clearance	mm	245		
2.6	Fork spacing	mm	1250		
2.7	Cab width	mm	960		
2.8	External turning radius	mm	3250		
2.9	Stabiliser width	mm	5700	5500	5800
2.10	Fork dimensions	mm	1220x122x40		
2.11	Max. fork width	mm	1036		
2.12	Rear overhang	mm	600		
PERFORMANCE					
3.1	Angle of arm inclination	deg	65/-5		
3.2	Fork tilt angle	deg	30/100	12/74	30/100
3.3	Arm rise speed	s	8		9
3.4	Arm lowering speed	s	6		
3.5	Arm extension speed	s	8	7	
3.6	Arm retraction speed	s	6	5	
3.7	Fork tilt speed	s	5	4	5
3.8	Fork retraction speed	s	3.3	2.5	3,3
3.9	Noise inside	dB	95		
3.10	Noise outside	dB	102		
3.11	Lifting speed (with/without load)	mm/s	450		
3.12	Lowering speed (with / without load)	mm/s	540		

NOBLELIFT