NOBLELIFT

4000 - 5000KG

FE4P40/45/50QL

4-WHEEL LITHIUM ELECTRIC FORKLIFT

- Ergonomic
- Powerful battery
- Easy maintenance
- Robust design
- Capacity 4000-5000kg
- High performance

Why choose between price and quality when you can have both !

FE4P40-45-50Q - PRODUCT FEATURES

// Innovative solutions, powerful energy

• The innovative Q Series features a lithium iron phosphate (LFP) battery with high-performance fast charging. Different battery capacities are available to suit all working conditions: 80V / 412Ah and optional 80V / 554Ah.

• Thanks to its powerful 80V / 200Ah standard charger, full charging takes just 2 to 3 hours, depending on the battery capacity chosen.

• The trucks have an AC motor as standard and a fleet management system as an option. REMA/Anderson charging connection system as standard and, as an option, an automotive-style high-frequency intelligent charging system.

• The FE4PQ Li-ion electric forklift has the advantage of being lightweight and having an optimised centre of gravity, which improves overall energy consumption.

// Robust, safer and more comfortable

• The mast mechanism, front and rear axles and robust chassis are equivalent to those of internal combustion forklift trucks.

• Q Series forklift trucks are fitted with large-diameter tyres offering improved performance for outdoor use and a comfortable driving experience, with soft solid tyres in the main configuration.

• The truck has a cornering deceleration function as standard, for safer driving.

// Intuitive operation and excellent visibility

- Spacious, comfortable cab, low entry step and wide floor for excellent accessibility.
- Adjustable suspension seat and armrest, for a pleasant, fatigue-free ride for the operator
- With its wide-view mast design, the spacious workstation provides excellent ergonomics.
- The Q series is equipped with a new large LED display, offering good visibility and intuitive reading.
- The standard curve deceleration function makes driving safer.

It is equipped with a powerful parking brake, enabling it to park with a load on a 15% gradient in complete safety.

With a clear, simple and intuitive LED display.

The U-shaped design of the steering wheel and the front-mounted multi-directional valve control make driving easy.
and effortlessly.

FE4P40-45-50QL - LITHIUM BATTERY H I G H L I G H T S

// Fast loading

- A new side-hatch feature for the lithium battery, making battery replacement quick and easy.
- Load capacity is flexible and optional, to suit different usage scenarios.
- The bonnet is designed to open to allow access to the lift motor, making maintenance easier.

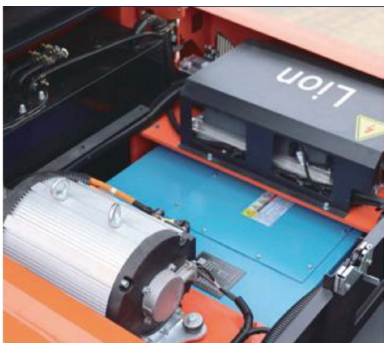

The side compartment design makes replacing the battery quick and easy.

Intelligent design of the control system and lift motor for easy maintenance.

An optional automotive-style recharging gun with rapid charge.
Note: Be sure to press the "stop" the magazine before firing the pistol.

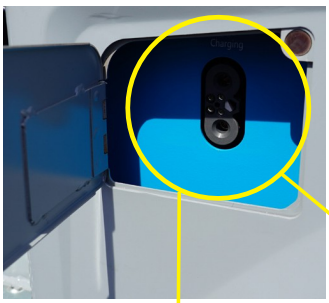

Includes:
REMA/Anderson connection

// A powerful and efficient battery

All lithium-iron batteries are equipped with an integrated battery management system (BMS) that manages all the important data during charging.
and discharge. Battery management by the BMS can guarantee the safety of the battery throughout its life cycle. The batteries have been certified for transport safety (air and sea) and operating standards. The BMS communicates with the battery management system via the CAN network. The CAN protocol enables the battery to be monitored, diagnosed and repaired u s i n g specific software.

// Safety and reliability

Efficient and maintenance-free

• The lithium battery reduces energy consumption by 35%, does not require a specific charging area and eliminates the cost of battery maintenance.

• The powerful lithium battery system consists of a high-performance, high-safety lithium-iron-phosphate battery, an intelligent battery management system (BMS), a thermal regulation system and an automotive-grade DC voltage control system. The BMS enables communication between the battery and the controller, the truck itself, the charger and the remote management platform, real-time detection of the state of the lithium battery, the operating state of the truck and the charging station, to maximise the safety and reliability of lithium batteries.

// Environmentally-friendly

High performance

Lithium batteries are more environmentally friendly. There is no acid evaporation, odour or pollution during the charging process. The operation of lithium-ion powered trucks is
and carbon dioxide emissions are zero. This makes lithium-ion powered forklift trucks an ideal choice for environmentally conscious businesses.

• Each lithium forklift truck requires only one battery, thanks to its fast charge function, regardless of the number of shifts worked.the life of a lithium battery is three times longer than that of a lead battery.lithium batteries require no maintenance and therefore produce a much higher output than lead batteries.

FE4P40-45-50QL mast table

4000 - 5000kg

Designation	Lift height h3 (mm)	Free lift h2 (mm)	Height of retracted mast h1 (mm)	Deployed mast height h4 (mm)	Forward/backward tilt α / β (°)	Capacity at CDG C=500mm		Capacity at CDG C=600mm
						FE4P40Q	FE4P45Q	FE4P50QL
Duplex	2500	150	2010	3617	6/10	4000	4500	5500
	2700	150	2110	3817	6/10	4000	4500	5500
	3000	150	2260	4117	6/10	4000	4500	5500
	3300	150	2410	4417	6/10	4000	4500	5500
	3500	150	2510	4617	6/10	4000	4500	5500
	3600	150	2560	4717	6/10	4000	4500	5500
	3700	150	2610	4817	6/10	4000	4400	5400
	4000	150	2810	5117	6/6	4000	4300	5100
	4500	150	3060	5617	6/6	3700	3900	5000
	4700	150	3160	5817	6/6	3600	3800	4400
	5000	150	3310	6117	6/6	3400	3600	4400
	6000	150	3860	7117	3/6	2800	3000	3800
Duplex Large free lift	2500	1350	2010	3612	6/10	4000	4500	5500
	2700	1450	2110	3812	6/10	4000	4500	5500
	3000	1600	2260	4112	6/10	4000	4500	5500
	3300	1750	2410	4412	6/10	4000	4500	5500
	3500	1850	2510	4612	6/10	4000	4500	5500
	3600	1900	2560	4712	6/10	4000	4500	5500
	3700	1950	2610	4812	6/10	4000	4400	5400
	4000	2100	2810	5112	6/6	4000	4300	5200
Triplex Large free lift	3700	917	1995	4808	6/10	4000	4400	5400
	4000	1017	2095	5108	6/6	4000	4300	5200
	4350	1123	2210	5458	6/6	3800	4000	4900
	4500	1182	2260	5608	6/6	3700	3900	4700
	4800	1282	2360	5908	6/6	3500	3700	4500
	5000	1397	2475	6108	6/6	3400	3600	4400
	5500	1562	2640	6608	3/6	3000	3200	4000
	6000	1807	2885	7068	3/6	2800	3000	3800

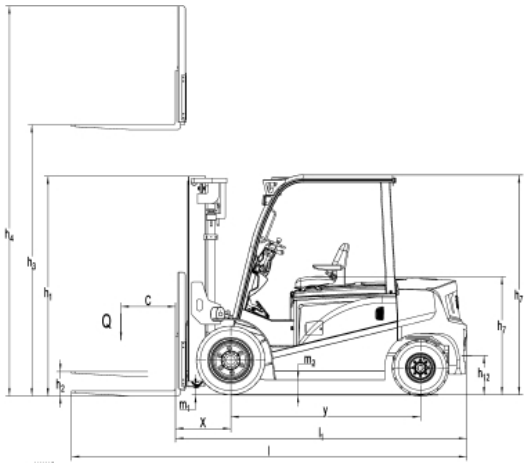

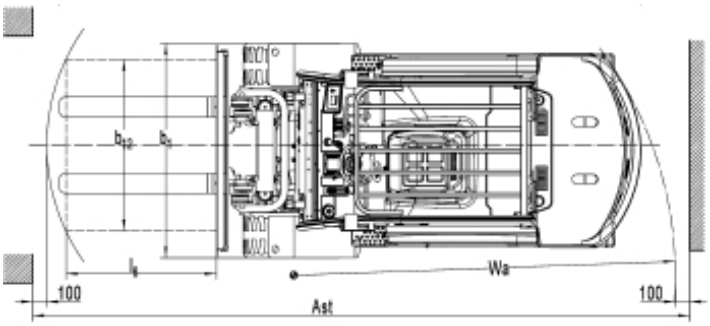

FE4P40-45-50QL Lithium electric forklift 4 wheels 4000- 5000kg

Identification					
1.1	Manufacturer's type designation		FE4P40Q	FE4P45Q	FE4P50QL
1.2	Transmission: electric (battery or mains), diesel, petrol, manual		electric		
1.3	Type of operation (manual, pedestrian, standing, seated, order picker)		base		
1.4	Load capacity/rated load	Q(kg)	4000	4500	
1.5	Centre of gravity	c(mm)	500		600
1.6	Load distance between the centre of the drive axle and the fork	x(mm)	563		568
1.7	Wheelbase	y(mm)	1950		
Weight					
2.1	Operating weight with battery	kg	6200	6500	7400
2.2	Axle load, front/rear laden	kg	9180/1020	9850/1150	10800/1600
2.3	Axle load, unladen front / rear	kg	2950/3250	2950/3540	2800/4600
Wheels, chassis					
3.1	Type: solid rubber, superelastic, pneumatic, polyurethane		PPS		
3.2	Front tyre size		250-15		28X12.5-15
3.3	Rear tyre size		23x9-10		
3.4	Number of wheels front/rear (x = drive wheels)		2x/2		
3.5	Front track width	b10(mm)	1200		1185
3.6	Rear track width	b11(mm)	1125		
General dimensions					
4.1	Mast/fork carriage tilt front/rear	α/β (°)	6/10		
4.2	Height of retracted mast	h1(mm)	2250		
4.3	Free lift	h2(mm)	150		
4.4	Basic lift height	h3(mm)	3000		
4.5	Deployed mast height	h4(mm)	4117		
4.6	Height of protective roof	h6(mm)	2265		
4.7	Seat height / standing height	h7(mm)	1200		
4.8	Hitch height	h10(mm)	490		
4.9	Total length	l1(mm)	3962		3967
4.10	Length to front of forks	l2(mm)	2892		2897
4.11	Total width	b1(mm)	1500		
4.12	Fork dimensions	L/l/h(mm)	50 /150/1070		55/150/1070
4.13	Fork carriage width	b3(mm)	1380		
4.14	Loaded ground clearance under mast	m1(mm)	135		
4.15	Ground clearance, centre of trolley	m2(mm)	165		
4.16	Aisle width for 1000x1200 pallets crosswise	Ast(mm)	4453		4458
4.17	Aisle width for pallets 800x1200 in length	Ast(mm)	4653		4658
4.18	Turning radius	Wa(mm)	2693		
Performance					
5.1	Travel speed with/without load	km/h	14/15		
5.2	Lift speed with/without load	m/s	0.3/0.42		0.3/0.4
5.3	Lowering speed, loaded/unloaded	m/s	0.38/0.42		
5.4	Traction, loaded/unloaded S2 60 min	N	5800/6200	6000/6500	6200/6650
5.5	Maximum traction, loaded/unloaded S2 60 min	N	17500/17000	17800/17500	
5.6	Maximum gradient performance, loaded/unloaded S2 5 min	%	16/20	15/20	
5.7	Service brake		Mechanical engineering		
Electric motor					
6.1	Traction motor power S2 60 min	kW	20		
6.2	Lifting motor output at S3 15%.	kW	26		
6.3	Standard battery		Lithium		
6.4	Battery voltage, nominal capacity K5	V/Ah	80/412 *(80/554 optional)*		
6.5	Battery weight	kg	330/420		
6.6	Battery dimensions 1/w/h	mm	1200/810/610		
Further information					
7.1	Type of drive control		AC		
7.2	Accessory operating pressure	Mpa	18.5		
7.3	Oil volume for accessories	1/min	65		
7.4	Acoustic pressure level EN 12 053	dB(A)	75		

NOBLELIFT