NOBLELIFT

1600 - 2000KG

FE3D16/18/20C

3-WHEEL ELECTRIC TWIN-MOTOR FORKLIFT TRUCK

- Ergonomic
- Respect for the environment
- Maintenance easy
- Best report value for money
- Capacity 1600-2000kg
- High performance
- Design robust

Why choose between price and quality when you can have both !

FE3D16-18-20C - PRODUCT FEATURES

// A concentrate of efficiency and performance

Our latest-generation transmission system is equipped with two gearboxes and two engines, giving it an impressive 20% lift capacity. Equipped with its new hydraulic motor, for the fastest lifting speeds.

// a new ergonomic design

Inspired by the N series forklift trucks, the new C series features modern, elegant lines and an ultra-compact chassis.

// New generation LCD screen

The operator can select different performance modes on the display, depending on the application. The intuitive, easy-to-use colour LCD screen provides all the information you need about
speed, steering angle and direction of travel,
fuel level indicator, etc.
battery, hour meter and work mode, optimising performance and comfort.

// Robustness and flexibility

Equipped with a reinforced chassis, our forklift truck adapts perfectly to all types of working conditions. With its compact chassis, tight turning circle and width of just 1,080 mm, it's ideal for manoeuvring in confined spaces.

// High comfort and ergonomic design

Equipped with a suspended seat, adjustable according to the weight, lumbar support and position of the operator, the full-suspension seat includes a restraint system. ergonomic design that helps support the operator while working. Electrical components, such as controls, displays and main switches, are all sourced from leading manufacturers. They reduce maintenance costs
and guarantee maximum performance and reliability. (KDS motor, Curtis drive, oil-immersed disc brake, Curtis indicator, Cascade accessories, etc.) This range of electric forklifts is fitted as standard with a new ergonomic steering wheel with a reduced diameter and a steering wheel ball. Its latest-generation hydraulic power steering (FHPS) ensures smooth, precise operation.

This truck is fitted as standard with a spacious, non-slip step and a large access handle, making it easy to get in and out of the truck.

Equipped with a host of features designed to enhance operator safety and comfort, including a rear handle with horn, left and right mirrors, USB connector, LED lights, Blue spotlights, etc., making this series a real pleasure to work with.

New suspended seat ultra-comfort ES-65

Optional Finger tip kit including Grammer seat, Rexroth valves, Elobau joystick

// Battery options

Choose between a lead-acid battery and a lithium-acid battery to meet a wide range of requirements, thanks to the many options available.

// Safety and reliability

Equipped with IPX4 connectors, the new C series trucks guarantee safety when used outdoors. Fitted as standard with a automatic speed reduction on bends and the OPS safety system, making these trucks a safe place to work.

FE3D16-18-20C mast table

1600 - 2000kg

Designation	Lifting height	Free lift h2 (mm)	Height of retracted mast h1 (mm)	Deployed mast height h4 (mm)	Forward/reverse tilt α / β (°)	Capacity at CDG 500mm		
						FE3D16C	FE3D18C	FE3D20C
Duplex	2500	125	1745	3455	5/7	1600	1800	2000
	2700	125	1845	3655	5/7	1600	1800	2000
	3000	125	1995	3955	5/7	1600	1800	2000
	3300	125	2145	4255	5/7	1600	1800	2000
	3500	125	2245	4455	5/7	1600	1800	2000
	3700	125	2345	4655	5/7	1600	1800	2000
	4000	125	2545	4955	3/5	1500	1750	1900
	4300	125	2695	5255	3/5	1450	1600	1700
	4500	125	2795	5455	3/5	1400	1480	1600
Duplex Large free lift	2500	790	1745	3455	5/7	1600	1800	2000
	2700	890	1845	3655	5/7	1600	1800	2000
	3000	1040	1995	3955	5/7	1600	1800	2000
	3300	1190	2145	4255	5/7	1600	1800	2000
	3500	1290	2245	4455	5/7	1600	1800	2000
	3700	1390	2345	4655	5/7	1600	1800	2000
	4000	1590	2545	4955	3/5	1500	1750	1900
Triplex Large free lift	4000	985	1745	4955	3/5	1500	1750	1900
	4350	1110	2065	5305	3/5	1450	1600	1700
	4500	1160	2115	5455	3/5	1400	1480	1600
	4800	1200	2155	5755	3/5	1350	1450	1550
	5000	1360	2315	5955	3/5	1250	1400	1500
	5500	1510	2465	6455	3/5	1150	1300	1400
	6000	1710	2665	6955	3/5	1000	1100	1200
	6500	1910	2865	7455	3/5	800	900	1000

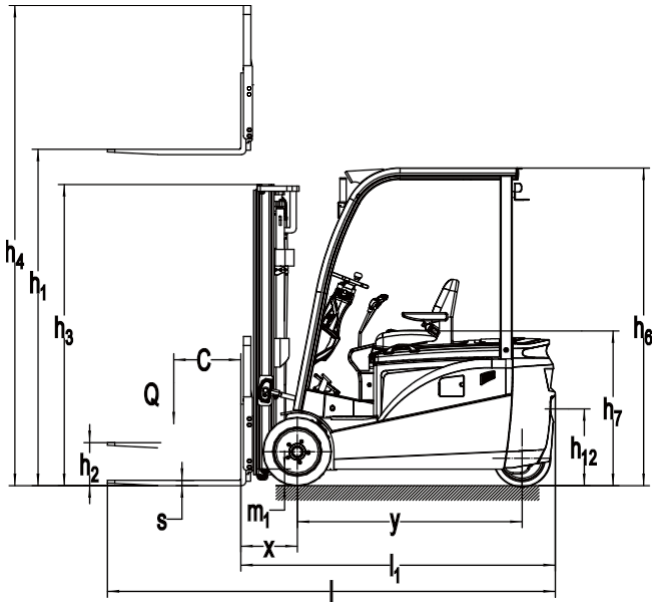

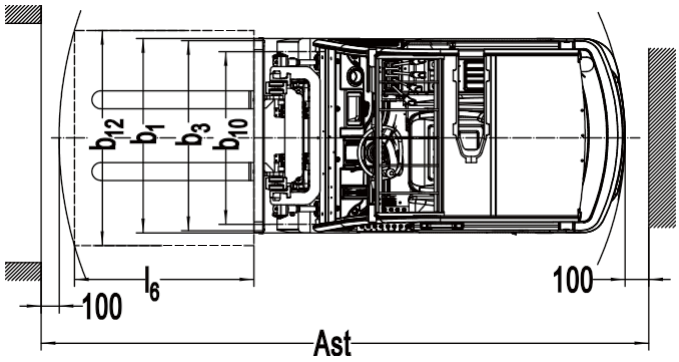

FE3D16-18-20C 3-wheel twin engine forklift truck 1600 - 2000kg

Identification					
1.1	Manufacturer's type designation		FE3D16C	FE3D18C	FE3D20C
1.2	Transmission: electric (battery or mains), diesel, petrol, manual		electric		
1.3	Type of operation (manual, pedestrian, standing, seated, order picker)		base		
1.4	Load capacity/rated load	Q(kg)	1600	1800	2000
1.5	Centre of gravity	c(mm)	500		
1.6	Load distance between the centre of the drive axle and the fork	x(mm)	372	377	
1.7	Wheelbase	y(mm)	1360		1490
Weight					
2.1	Operating weight with battery	kg	3100	3220	3520
2.2	Axle load, front/rear laden	kg	4180/520	4470/550	4910/610
2.3	Axle load, unladen front / rear	kg	1490/1610	1550/1670	1700/1820
Wheels, chassis					
3.1	Type: solid rubber, superelastic, pneumatic, polyurethane		PPS		
3.2	Front tyre size		18x7x12-1/8		
3.3	Rear tyre size		15x5x11-1/4		
3.4	Number of front/rear wheels (x = drive wheels)		2x/2		
3.5	Front track width	b10(mm)	902		
3.6	Rear track width	b11(mm)	187		
Basic dimensions					
4.1	Mast/fork carriage tilt front/rear	α/β (°)	5/7		
4.2	Height of retracted mast	h1(mm)	1995		
4.2	Free lift	h2(mm)	125		
4.3	Basic lift height	h3(mm)	3000		
4.4	Deployed mast height	h4(mm)	3955		
4.5	Height of protective roof (cab)	h6(mm)	2100		
4.6	Seat height	h7(mm)	1005		
4.7	Hitch height	h10(mm)	465		
4.8	Total length	l1(mm)	2870	3025	3155
4.9	Length to front of forks	l2(mm)	1950	1955	2085
4.10	Total width	b1(mm)	1084		
4.11	Fork dimensions	L/l/h(mm)	35/100/920	40/100/1070	40/120/1070
4.12	Fork carriage width	b3(mm)	1040		
4.13	Loaded ground clearance under mast	m1(mm)	105		
4.14	Ground clearance, centre of trolley	m2(mm)	105		
4.15	Aisle width for 1000x1200 pallets crosswise	Ast(mm)	3268	3273	3403
4.16	Aisle width for pallets 800x1200 in length	Ast(mm)	3393	3397	3527
4.17	Turning radius	Wa(mm)	1570		
Performance Data					
5.1	Travel speed with/without load	km/h	14/15		13/15
5.2	Lift speed with/without load	m/s	0.30/0.42		
5.3	Lowering speed, loaded/unloaded	m/s	≤600		
5.4	Traction, loaded/unloaded S2 60 min	N	8500/7800		8800/8000
5.5	Maximum gradient performance, loaded/unloaded S2 5 min	%	15/20		13/18
5.6	Service brake		hydraulics		
Electric motor					
6.1	Traction motor power S2 60 min	kW	4.5x2		
6.2	Lifting motor output at S3 15%.	kW	8.6		
6.3	Standard battery		Lead / Lithium		
6.4	Battery voltage, nominal capacity K5	V/Ah	Lead: 48/455(490/560)optional Lithium: 51/277(412/554)optional		
6.5	Battery weight	kg	Lead: 800 / Li-ion: 450		
6.6	Battery dimensions 1/w/h	mm	980/538/670		
Further information					
7.1	Type of drive control		AC		
7.2	Hydraulic pressure for equipment	Mpa	17.5		
7.3	Oil volume for accessories	1/min	36		
7.4	Acoustic pressure level	dB(A)	73		

NOBLELIFT