NOBLELIFT

1800 - 2500KG

FE2RT18/25

LITHIUM ELECTRIC ROUGH-TERRAIN FORKLIFT TRUCK

- Ergonomic
- Powerful battery
- Easy maintenance
- Robust design
- Capacity 1800-2500kg
- High performance

Why choose between price and quality when you can have both !

FE2RT18-25 - PRODUCT FEATURES

// Performance on a slope

It can be as high as **30%**, making it ideal for all applications on uneven terrain.

// Driving speed

20 km/h, making it the fastest all-terrain electric forklift on the market.

// Flexibility of use

Fully hydrostatic power steering (FHPS) ensures optimum flexibility and comfort for the operator.

// Charging time

Fully charged in **2 hours**, **80%** in **45 mm.** The battery can be recharged during short breaks, allowing the truck to work almost continuously. No need to change the battery.

// Fork lift speed

350 mm/s, which is comparable to a forklift truck with an internal combustion engine.

// Reduced height

2130 mm roof height, so you can work in spaces with limited headroom

// Total width

Only **1450 mm**.

// Ground clearance

269 mm, for optimum clearance.

// Turning radius

2730 mm, the independent drive wheels give this truck great manoeuvrability.

// Visibility

Thanks to its innovative design, the mast of the FE2RT forklift provides optimum visibility and comfort for the operator.

Equipped with LED lights as standard, Blue Spot, suspension seat and USB port

Dimensions	Total width	1450 mm	Ideal for tight spaces
	Total height	2130 mm	Low construction height for loading in spaces with limited headroom
Performance	Ground clearance	269mm	High ground clearance for optimum crossing capacity
	Turning radius	2730mm	Small turning radius, independent drive wheel, great manoeuvrability
	Maximum ramp in	30% with load	one of the best crossing capacities on the market
	Travel speed	20km/h	The fastest electric rough-terrain forklift on the market
	Lifting speed	350mm/sec	Similar to an internal combustion engine forklift truck
Li-ion green energy	Operating time with one battery charge	4-6 hours	The integrated energy management system constantly monitors energy management to ensure optimum uptime
	Charging time	Less than 2 hours	Ultra-fast charging, 80% of charge in just 45 minutes
	Pollutant emissions	No emissions thanks to its electric motor and lithium batteries	Respect for the environment
Security	Protection class	Moisture/water resistant	IP54 watertightness standard
	Brakes	Oil-immersed disc brake	Greater stability and reliability than traditional drum brakes
	OPS System	Security	The operating system deactivates the traction and operating devices when the driver leaves the seat.
Ergonomics	Noise level	Only 73 Db	Hearing protection and operator comfort/safety
	Vibrations	Vibrations are reduced	Vibrations are much lower than with an internal combustion engine, improving operator comfort.
	Workspace		Large, airy workspace, improved operator comfort and convenience
Total cost of ownership	Energy saving	10KWH/h	Operating costs 60-70% lower than a diesel engine
	Maintenance costs		Maintenance-free, carbon-free AC motor, low maintenance costs

// Comfort and ergonomics

The focus on comfort and ergonomics ensures optimum efficiency and productivity while ensuring operator safety.
Small diameter steering wheel with on-demand fully hydrostatic power steering (FHPS) selector for effortless driving.
Spacious anti-slip step for easy entry and exit.
and exit the trolley.

FE2RT18-25 mast table

1800-2500kg

Masts		Type	Lifting height on forks (mm)	Total height with mast lowered	Free lift on forks (mm)		front overhang	Angle of incli-nation of front/back mast	Capacity at max. height Height (kg) at CDG(500mm)	
					with support	unsupported			without sideshift carriage	with side-shift carriage
Duplex	3.00m	FE2RT18/25	3000	2230	165	165	580	10/12°	2500	2500
	3.30m	FE2RT18/25	3300	2380	165	165	580	10/12°	2500	2500
	3.50m	FE2RT18/25	3500	2485	165	165	580	10/12°	2500	2500
	4.00m	FE2RT18/25	4000	2780	165	165	580	10/12°	2500	2500
	4.50m	FE2RT18/25	4500	3030	165	165	580	10/12°	2200	2100
Triplex Large free lift	4.00m	FE2RT18/25	4000	2075	893	1338	585	10/12°	2500	2400
	4.35m	FE2RT18/25	4350	2200	1018	1463	585	10/12°	2400	2200
	4.70m	FE2RT18/25	4700	2315	1133	1578	585	10/12°	2100	1900
	5.00m	FE2RT18/25	5000	2450	1268	1716	585	6/6°	1900	1600
	6.00m	FE2RT18/25	6000	2800	1618	2063	585	6/6°	1200	800
	6.50m	FE2RT18/25	6500	3015	1833	2278	585	6/6°	700	400

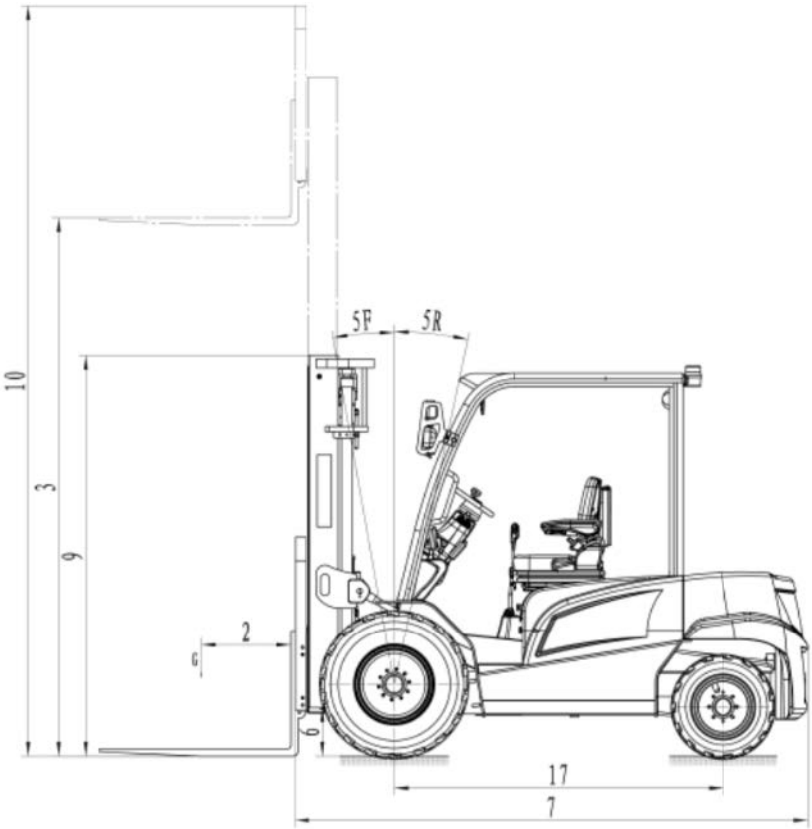

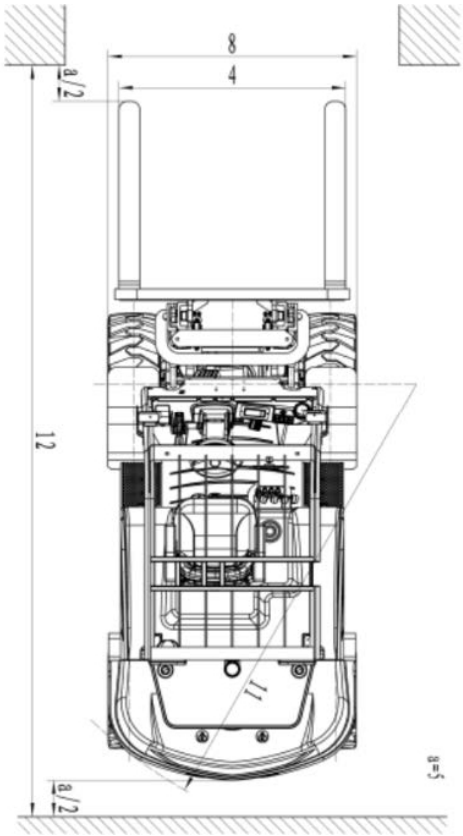

Identification						
1.1	Model				FE2RT18-Li	FE2RT25-Li
1.2	Energy			kg	Li-ion battery	
1.3	Load centre of gravity			mm	500	
1.4	nominal load capacity			Q(t)	1,8	2,5
1.5	Wheelbase			mm	1840	
Features and dimensions						
2.1	Lifting height			h3(mm)	3000	
2.2	Minimum/maximum fork spacing	Min./Max.		b3(mm)	200-1000	250-1160
2.3	Mast tilt angle	forks, front/rear		a/b(°)	10/12	
2.4	Minimum ground clearance			m2(mm)	270	
2.5	General dimensions	Length to fork face (without fork)		l2(mm)	2850	2871
2.6		Total width		b1/b2(mm)	1450	
2.7		Lowered mast height		h1(mm)	2150	2230
2.8		Height of extended mast (with backrest)		h4(mm)	4145	4170
2.9	Turning radius			Wa(mm)	2730	
2.10	Minimum width of stacking aisle at right angles	a=1000, b= l 200		Ast(mm)	4800	4860
2.11		a=1200, b=800		Ast(mm)	4400	4460
Performance						
3.1	Travel speed with/without load			km/s	20	
3.2	Speed	Lift (under load)		mm/s	380	350
3.3		Lowering (under load)		mm/s	450	
3.4	Maximum gradient (loaded)			%	30	25
Weight						
4.1	Operating weight			kg	3640	4480
4.2	Axle load	With charges	Front axle	kg	4720	6100
4.3			Rear axle	kg	720	880
4.4		Without charges	Front axle	kg	1440	1800
4.5			Rear axle	kg	2200	2680
Power and transmission						
5.1	Battery	Voltage/Capacity		V/Ah	80/220	80/320
5.2	Transmission				ZAPI	
5.3	Engine				PMP	
5.4	Operating pressure			Mpa	14,5	17.5

NOBLELIFT
OBLELIFT
FT